Green Pin® Open Wedge Socket – GPOWS

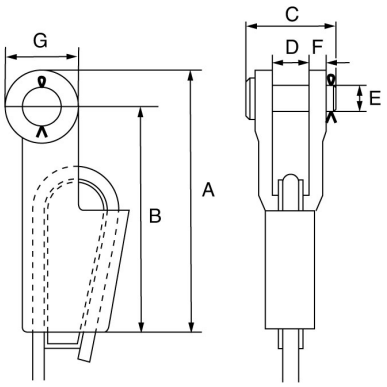

- High tensile steel.
- Hot dipped galvanised finish.
- Sizes generally to BS EN 13411-6.
- Temperature range -20°C up to +200°C.
- Full CAD support available upon request.
- Certification available 2.1 3.1 MTC DoC

G-6413

Product Code	Number	M.B.L.	Wire Rope Dia	A	B	C	D	E	F	F	Weight
		t	mm	mm	mm	mm	mm	mm	mm	mm	kgs
GPOWS.25	0.25	8	7-8	128	110	51	18	16	9	36	0.79
GPOWS.5	0.5	12	9-10	165	142	62	20.5	21	11	46	1.5
GPOWS1	1	20	11-13	175	146	66	25	25	12	57	2.4
GPOWS2	2	25	14-16	211	176	82	31	30	15	70	4

GPOWS3	3	40	18-19	252	212	95	38	35	16	80	7.4
GPOWS4	4	55	20-22	288	240	110	44	41	19	95	11
GPOWS5	5	75	24-26	329	274	130	51	51	22	110	16
GPOWS6	6	90	27-29	375	310	144	57	57	25	130	22
GPOWS7	7	110	30-32	423	350	155	63	64	28	146	31
GPOWS8	8	125	34-36	474	400	163	69	64	28	148	39
GPOWS9	9	150	37-39	527	450	178	76	70	30	153	50
GPOWS10	10	170	40-42	580	500	187	76	76	33	160	66
GPOWS11	11	225	43-48	650	550	213	89	89	39	186	96
GPOWS12	12	280	49-52	745	640	240	101	95	46	194	130
GPOWS13	13	360	54-58	785	660	275	114	108	54	250	180
GPOWS14	14	425	60-68	970	835	300	127	121	60	270	275
GPOWS15	15	460	72-76	1150	1000	355	146	133	76	300	440
GPOWS16	16	625	81-86	1310	1160	375	159	140	79	300	510